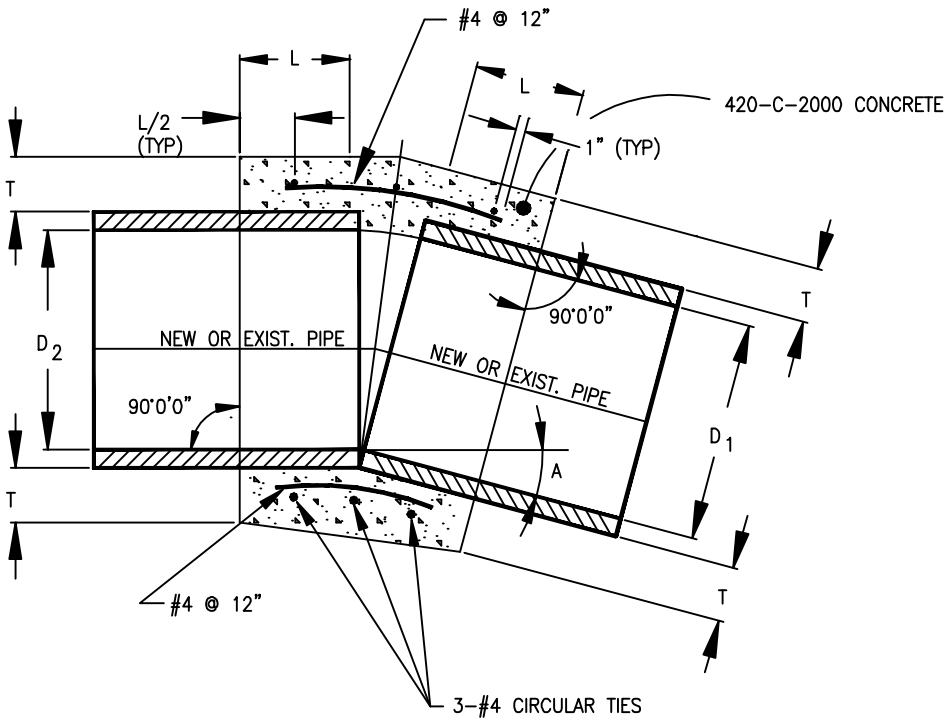

NOTES:

1. A CONCRETE COLLAR IS REQUIRED WHERE THE CHANGE IN GRADE EXCEEDS 0.10 FEET PER FOOT.
2. WHERE PIPES OF DIFFERENT DIAMETERS ARE JOINED WITH A CONCRETE COLLAR, L AND T SHALL BE THOSE OF THE LARGER PIPE $D=D_1$ OR D_2, WHICHEVER IS GREATER.
3. FOR PIPE LARGER THAN 66 INCHES, A SPECIAL COLLAR DETAIL IS REQUIRED.
4. FOR PIPE SIZE NOT LISTED USE NEXT SIZE LARGER.
5. OMIT REINFORCING ON PIPES 24 INCHES AND LESS IN DIAMETER AND ON ALL PIPES WHERE ANGLE "A" IS LESS THAN 10°.
6. WHERE REINFORCING IS REQUIRED THE DIAMETER OF THE CIRCULAR TIES SHALL SHALL BE D+(2xWALL THICKNESS)+8 INCHES.
7. WHEN D_1 IS EQUAL TO OR LESS THAN D_2, JOIN INVERTS AND WHEN D_1 IS GREATER THAN D_2, JOIN SOFFITS.
8. PIPE MAY BE CORRUGATED METAL PIPE, CONCRETE PIPE, OR REINFORCED CONCRETE PIPE.
9. NOT TO BE USED FOR A SIZE CHANGE ON THE MAINLINE.

TABLE

D	L	T
12"	1.0'	4"
18"	1.0'	5"
24"	1.0'	6"
36"	1.5'	8"
48"	1.5'	10"
57"	1.5'	10"
60"	1.75'	11"
66"	1.75'	11"

CITY OF CHINO HILLS			
	CHRIS VOGT CITY ENGINEER	CONCRETE COLLAR **FOR PIPES 12" THRU 66"**	SD103